Clock Uncertainty

1. Clock Skew

It is the difference in the arrival time of the clock at different flip flops resulting from different propagation delays from the chip clock pin to different flip flops.

The general structure of synchronous pipelines is shown in the photo below. A clock signal is fed into many flip flops in the design. As we already know the internal structure of a flip flop, a clock signal is fed to 4 transmission gates in each flip flop, which is equivalent to 8 transistors. So, the clock signal sees capacitance from $8 * number\ of\ flip\ flops$, which is a huge capacitance. Moreover, the wires themselves that we use to distribute that clock has capacitance as we saw in the previous lecture.

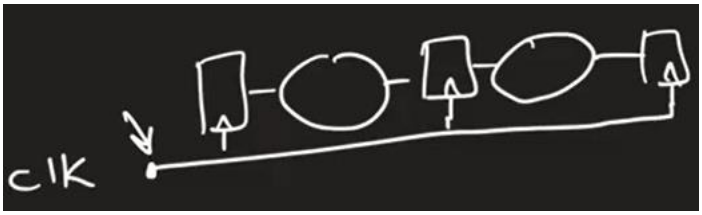

Accordingly, a large buffer is needed in the clock's path to drive this large capacitance as shown below (remember: when we say that a buffer "drives" a capacitance, it means that it is capable of supplying the necessary current to charge and discharge the capacitance quickly). This buffer is nothing but a chain of inverters sized using the logical effort.

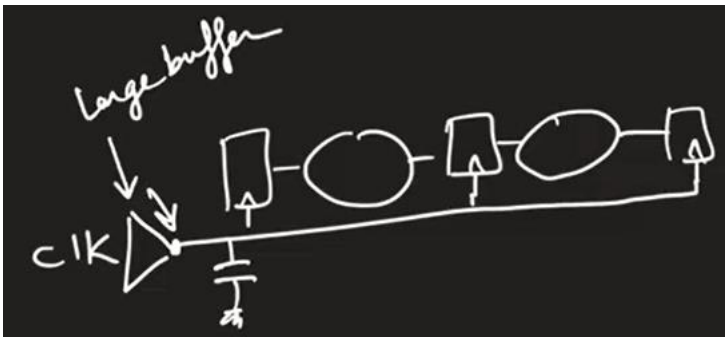

So, we solved the problem of the large capacitance that a clock signal sees. However, the bigger problem is the resistance of the wires carrying the clock. Why? la2en wogood resistance fel wires da hay5aly el clock tewsal fi aw2at mo5talefa at different flip flops. 5aly balak en lw kan el clock wires 3obara 3an capacitance bs, kanet el clock hatewsal 3and kolo fi nafs el wa2t 3ady, laken el resistance hat5aleha tewsal fi aw2at mo5talefa. This is shown below:

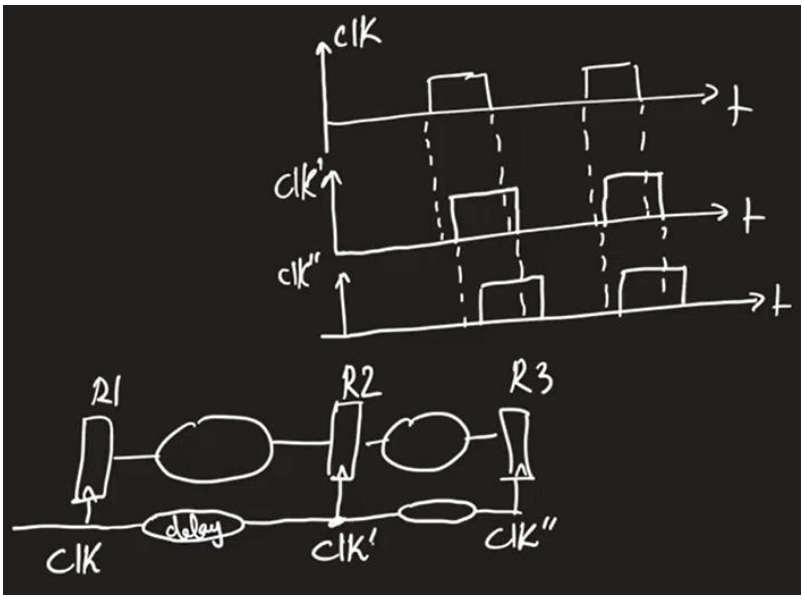

Having the clock arriving at different times at different flip flops is called *clock skew*. Notice that clock skew is a **spatial and deterministic** phenomenon. Deterministic means that it is not random, which means that once placement of all flip flops is done, you can estimate the clock skew between each two successive registers. Spatial means it is function of space because as two successive flip flops gets farther or nearer from each other, clock skew between them changes.

But what determines whether the skew is positive or negative?

If the clock and data are moving in the same direction → positive skew.

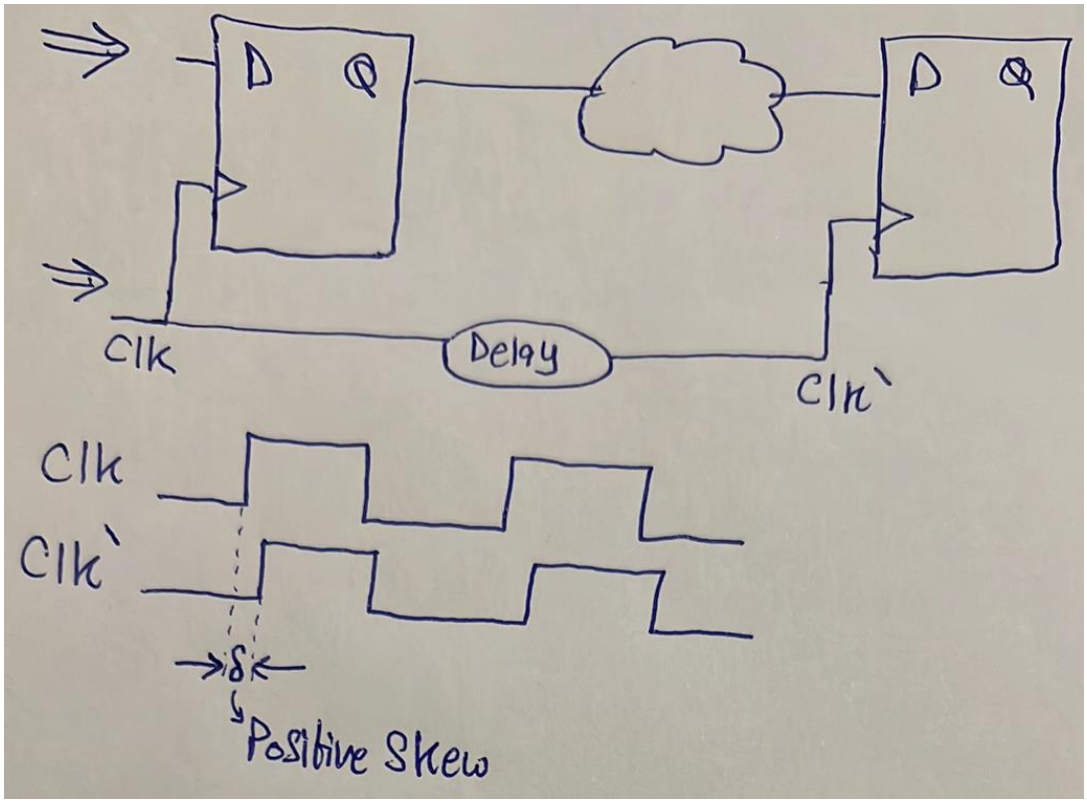

If the clock and data are moving in opposite directions → negative skew.

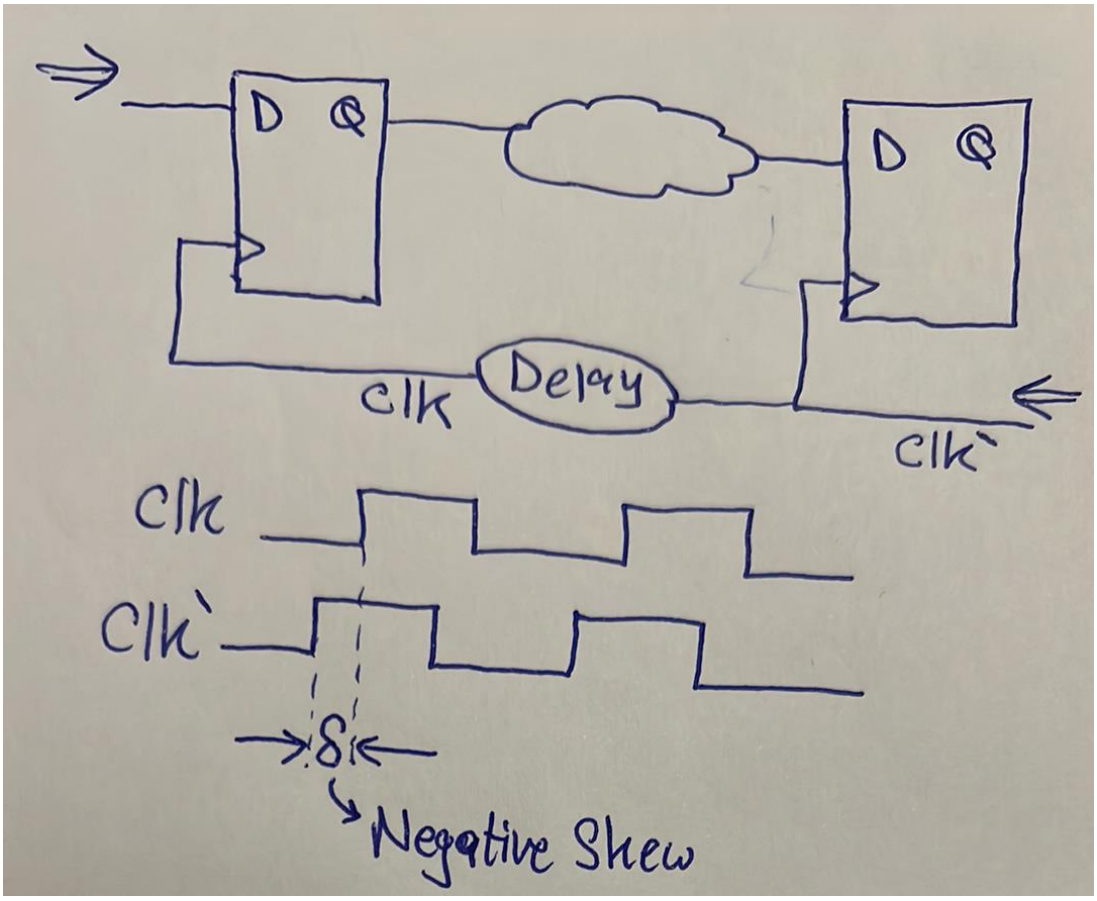

So, the question is: who decides how the clock moves? the “clock distribution network” made by the routing tool. Whenever the tool has the choice to make either positive skew or negative skew (i.e. distribute the clock such that it is in the same or opposite direction of the data), it will choose based on which paths have setup/hold violations so that it solves these violations.

Watch the first 20 minutes in video 1.

Tyb lw el tool 3andaha el e5tyaar te5tar bera7et-ha mabeen positive w negative skew, hate5tar meen? most of the times hate5tar el negative skew mesh el positive skew. Leeh? la2en lw baseet 3la el equation beta3et el setup analysis wel hold analysis, hatla2y en el clock period T zahra fi el setup equation bs, mesh zahra fi el hold equation. El fekra b2a en el T de beteb2a akbar bekteer men qemet el skew δ, fa en e7na nedeef el δ de fi equation el setup sawa2 be tare2a tesa3do aw tare2a tedoro actually mesh betefre2 keteer la2enaha almost negligible bel nesba lel T. On the other hand b2a, el T mesh beteb2a mawgooda fi equation el hold, fa el times el da5la fi equation el hold beteb2a mesh kebera awy, fa el δ beyeb2a leha ta2seer actually fi el equation bta3t el hold. Fa 3ashan keda el tool bete5tar el δ such that enaha tesa3ed el hold equation, el howa enaha te5tar negative skew!

2. Clock Jitter

It is the deviation in the timing of a clock signal from its ideal timing due to phase noise.

When designing a clock oscillator (i.e. circuit that generates a periodic square wave), there is some uncertainty in the time at which the edges occur due to phase noise of the oscillator as shown below:

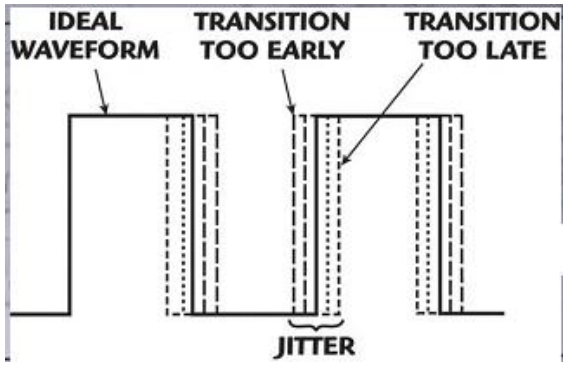

In other words, if you are designing a clock of period T, then it will not always maintain this T value through the whole waveform as shown below:

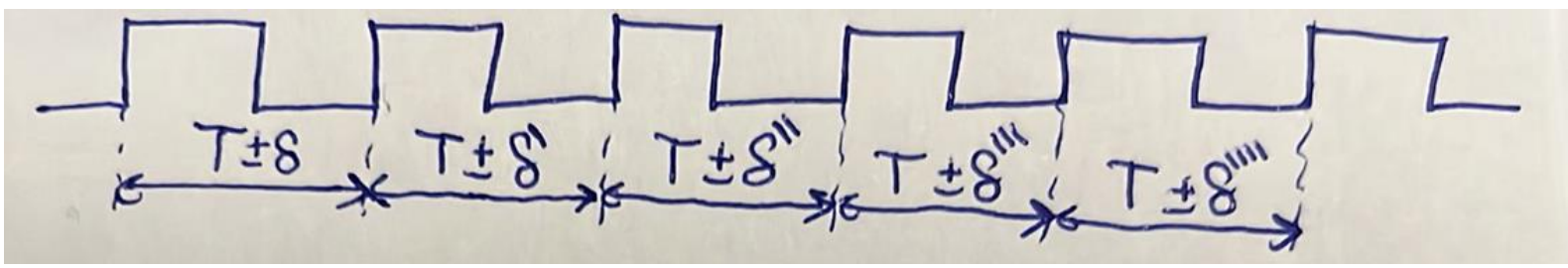

Notice that *clock jitter* is **temporal and stochastic**. Temporal because it changes from time to time, and stochastic because it is random. Accordingly, it has a normal distribution with zero mean as shown below:

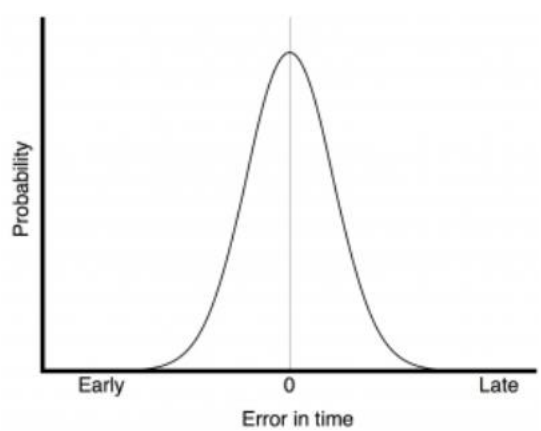

We assume that the maximum jittering that can occur is T_j (which can be between 1σ and 2σ) as shown below:

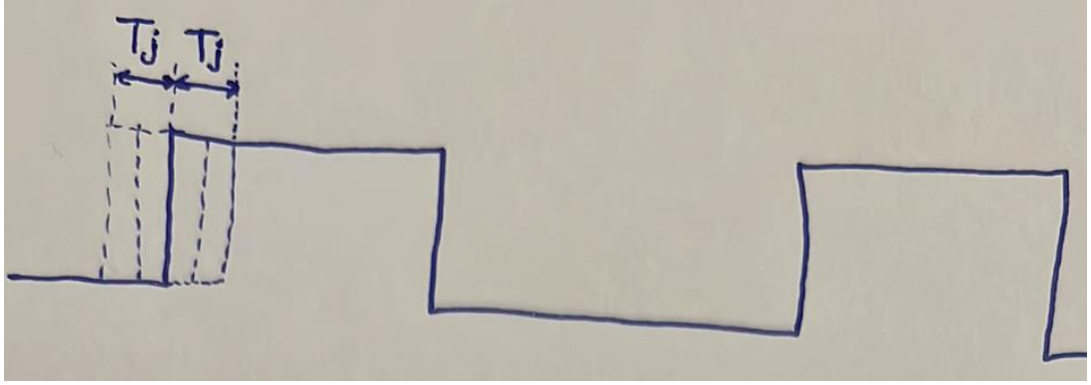

In setup analysis, we should design for the worst-case jittering shown below:

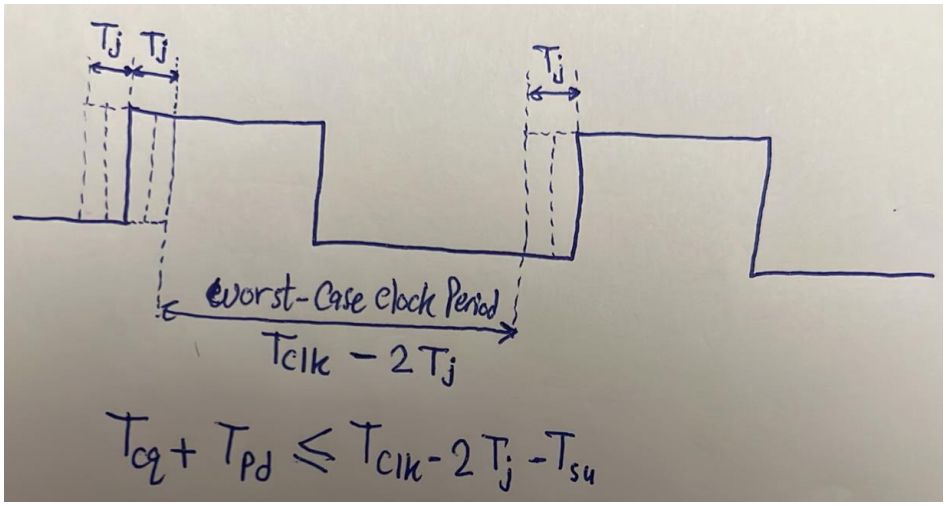

How does jitter impact hold time?

Answer: jitter does not have any impact on hold-time violations. Why? because hold-time analysis is done on one clock edge, so even if jitter moves the active edge, it moves it for all registers simultaneously. Thus, regardless of the position of the edge, no new hold-time violations can occur. Skew had the potential to create new hold-time violations because it caused different registers to observe different clocks.

There are other sources of jitter and skew than the ones we mentioned:

Source of imperfection	Skew	Jitter
Clock generation	No	Yes
Buffer mismatch	Yes	No
Wire mismatch	Yes	No
Load mismatch	Yes	No
Temperature variations	Yes	Yes
Noise	No	Yes
Power supply variations	Yes	Yes

Watch this from 9:10 to the end.

More on the three mismatches (note: wenta betefham wa7ed fihom, assume en el etneen el tanyeen mesh 7asleen):

1) Wire Mismatch: ma2sood beh en yeb2a fih difference in the wire length between two flip flops as shown below:

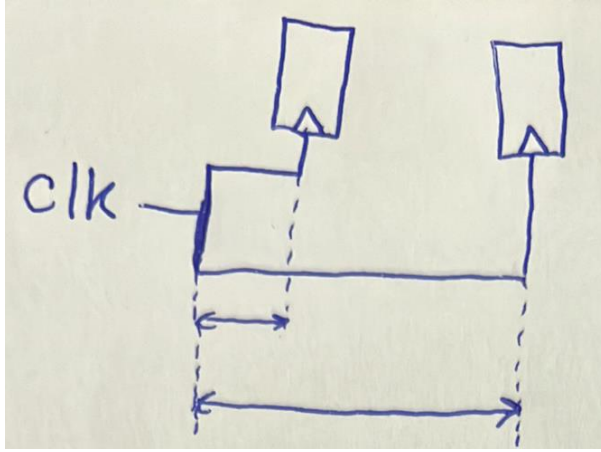

2) Buffer Mismatch: we know that we place buffers in the different clock routes to balance the arrival time of the clock at different flip flops. Although we might intend to make some of these buffers identical, due to fabrication, their size might differ as shown below:

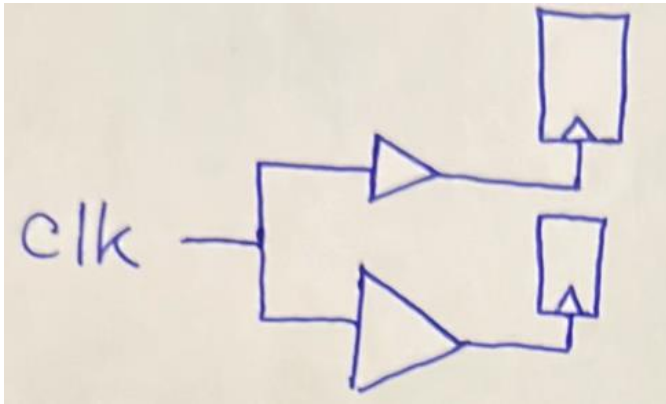

3) Load Mismatch: due to fabrication, the size of transmission gates inside different flip flops might differ and hence their loading would differ as shown below:

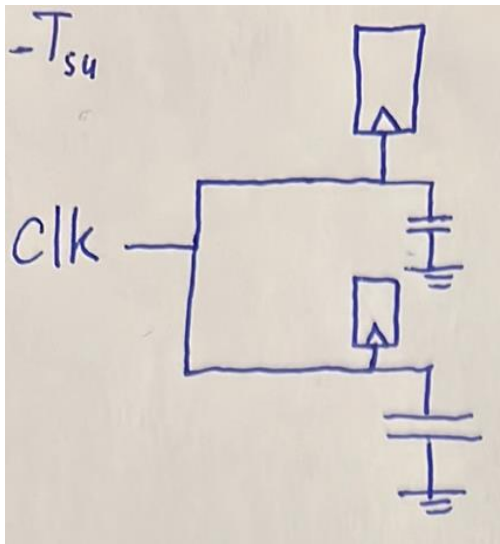

Summary:

–	Clock Skew	Clock Jitter
Definition	Difference in arrival time of clock at different flip flops.	Deviations in timing of clock edges.
Source	Buffer mismatch, wire mismatch, load mismatch, temperature variations, power supply variations.	Phase noise of clock oscillator, temperature variations, power supply variations.
Effect	Positive skew may cause hold violations, while negative skew may cause setup violations.	May cause setup violation but no hold violations.
Properties	Spatial and Deterministic	Temporal and Stochastic

Clock Network Distribution

In any type of clock network distribution, our main goal is to:

1) Minimize skew.

2) Minimize area and power.

3) Keep it design independent.

Alpha Grid Distribution

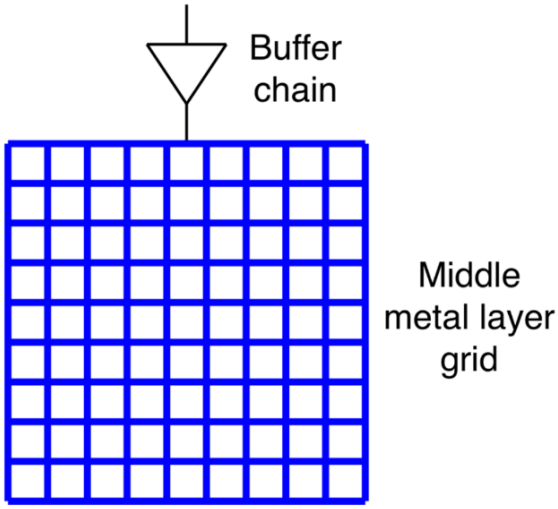

The first idea for distribution of clock is using a metal grid as shown on the right. El clock hateb2a da5la men foo2 w hat3ady 3la buffer 3ashan ye drive el large capacitance as we said before. Then, hatebda2 el clock t3ady fi metal wires ketera gedan (in blue) b7ees teb2a distributed fi kol 7eta. El manzar da keda beyeb2a mawgood fi metal layer mo3ayana, wel design beta3ak el mafrood ta7teha, b7ees ay flip flop y3ooz clock yeshed wire through via men a2rab no2ta 3al grid de 3ashan ya5od clock. Fa el hadaf men el tare2a de heya enena nermy as much metal as possible b7ees ne5aly el clock wasla 3and kol el points bta3t el grid fi nafs el wa2t, w bel taly keda ay flip flop hayegy ya5od clock men el grid teb2a el clock wasla le kol el flip flops fi nafs el wa2t. Fa keda e7na 3amalna eh ta7dedan? e7na keda 2alelna el absolute delay everywhere, y3ny 7awelna ne5aly el clock tewsal le kol el flip flops el fel design fi nafs el wa2t. Hal el absolute delay da howa el hamemny? la2 ana fel 7a2e2a el fare2 m3aya howa el relative delay maben kol 2 flip flops beykalemo b3d, el howa el skew. Y3ny ana mesh fare2 m3ayan en el clock tewsal 3and flip flop fi awel el design w flip flop fi a5er el design fi nafs el wa2t, la2en be basata homa malhomsh ay 3elaka be b3d. Laken el fare2 m3aya en kol 2 flip flops beyeb3ato le b3d data homa dool el f3ln a minimize el skew mabenhom.

Tab3an el tare2a de malyana 3oyoob ketera ahamaha enaha beta5od area raheba, de momken tkoon metal layer kamla day3a bs fel clock distribution, w tab3an area kebera ma3naha power kebera. Tany 3eeb howa en although momken nkoon 3amleen el grid de 3ashan ne2alel el absolute delay everywhere, ela en bardo el metal wires el fel grid de mesh ideal and hence el delay hayeb2a beyzeed kol ma nenzel le t7t. In other words, lw fih flip flop mawgood fi awel el grid foo2 3al shmaal beykalem flip flop t7t 3al yemeen, fa hayeb2a fih skew kebeer benhom. Tyb omal eh mezet el tare2a de? mezet-ha enaha design independent. That is, el grid de keda heya el clock distribution ayan kan el design bta3ak et3amalo placement ezay.

Moshkelet en el delay beyzeed kol ma nenzel t7t momken simply ne7elaha 3an taree2 enena ne drive be buffers men kaza ne7ya as shown below. Keda hayeb2a el skew mawgood kol ma ne2arab men el center bs badal ma kan 3al atraaf kaman.

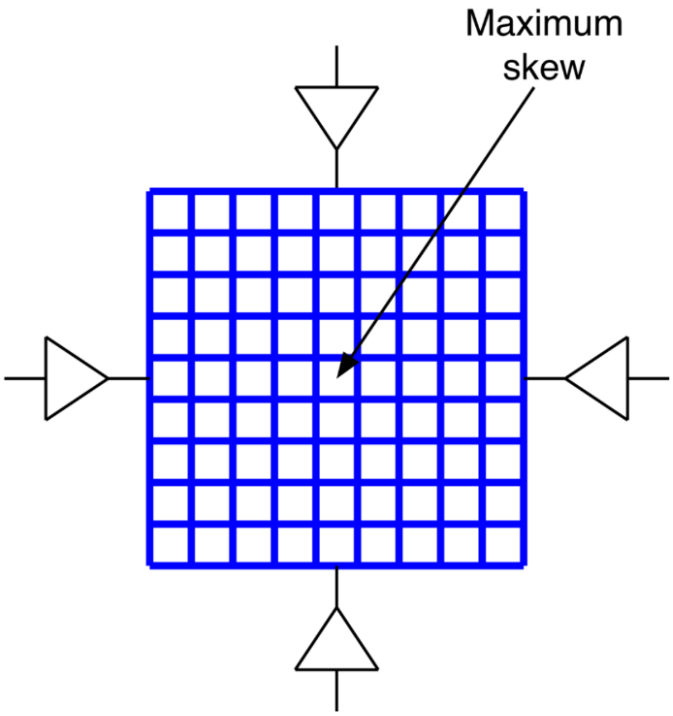

Practically b2a el by7sl howa enena ben2asem el grid de le multiple grids w kol 7eta fel design ta5od grid b7ees ne7awel ne2alel el skew as much as possible, w kaman ne drive be drivers ketera as shown below.

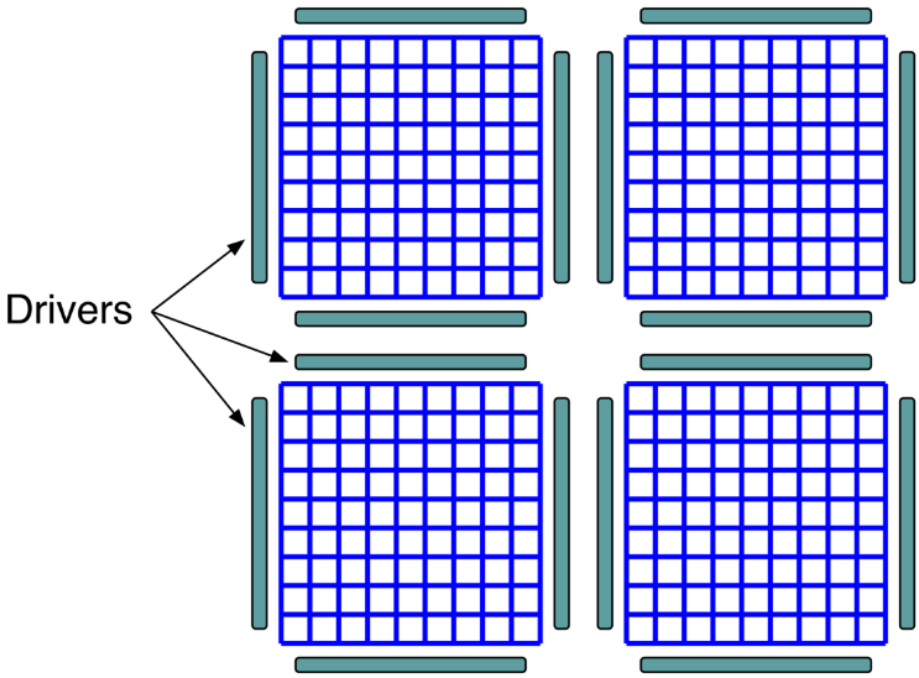

Clock Tree Distribution

The second idea is to use levels of buffers, called tree, as shown on the right. El fekra men 7aga zy keda heya enena mesh ne2alel el absolute delay b2a, la2 ne2alel el relative delay 3an taree2 enena ne minimize el skew on the same level. 5aly balak en kol level 3al yemen hayeb2a 3ando skew ma3 el levels el ableh, laken el level el wa7ed el skew minimized fih. Accordingly, lama yeb2a fih 2 flip flops beykalemo b3d, edehom clock men nafs el level. For example, shed wire men A wadeh le awel flip flop w shed wire men B wadeh le tany flip flop.

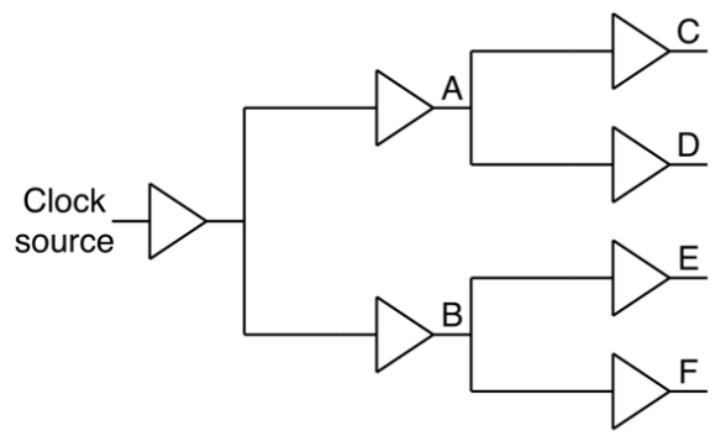

An example of a clock tree is the H tree shown below.

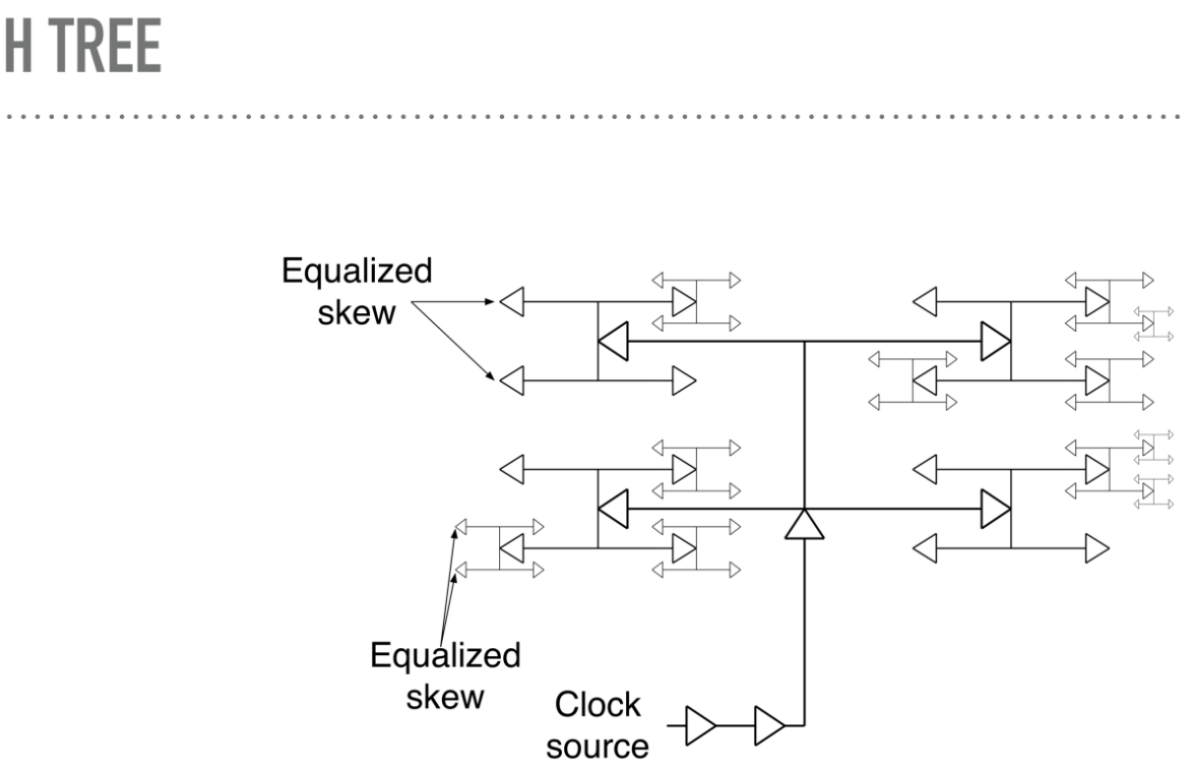

Tab3an bayen hena en el trees de fiha area a2al bekteer men fekret el grid. However, el tree de hateb2a very design dependent, kol ma teghayar fel placement bta3 el design hate7tag te re-synthesize el clock tree.

Summary:

	Alpha Grid	Clock Tree
Advantages	• Design independent.	• Relatively small area and power. • Minimizes skew.
Disadvantages	• Large area and power. • Inevitable skew.	• Design dependent.

Hybrid Distribution

- Spine creates zero delay in vertical direction
- H-trees to local domains
- Alpha grids in local domains
  - Allows local design independence

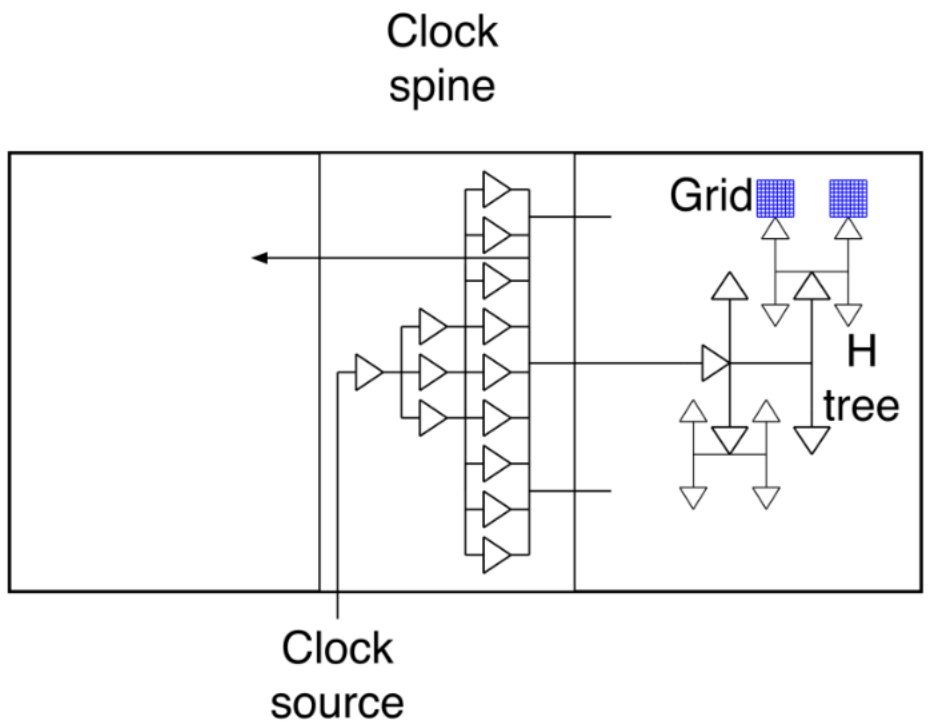

Hybrid distributions are used in large systems. For example, when making a transceiver, the transmitter can be accommodated a grid, while the receiver is allocated another grid.